CLEVELAND STEEL TOOL

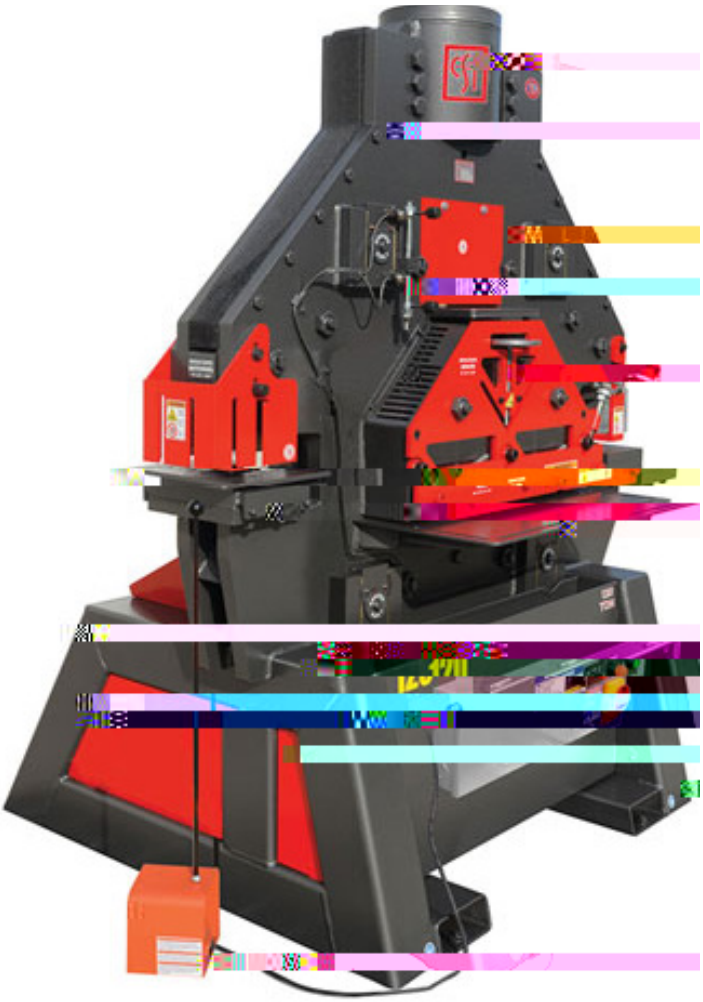

120 Ton Ironworker Manual

Serial #_____

800-446-4402
www.clevelandsteeltool.com
474 E. 105th St. • Cleveland, OH 44108

Table of Contents

1 Company Profile, Warranty
2 Operator and Supervisor Information
3 Requirements
4-5 Signal Panel Information
6 Installation
7 Machine Front View
8 Machine Back View
9 Machine Side Views
10 Maintenance Precautions and Schedule
11 Operations Diagram
12 Control Panel
13 Electric Stroke Control
14 Flat Bar Shear Station
15 Flat Bar Shear Station Maintenance
16 Angle Shear Station
17 Angle Shear Station Maintenance
18 Coper Notcher
19 Coper Notcher Maintenance
20 Optional Tooling - Auto Cut
21 Optional Accessory Light
22 Punch Station
23 Punch Operation
24 Optional - Oversize Punch
25 Optional - Oversize 241 Punch
26 Punch Station Maintenance
27 Punch and Die Styles
28 Optional - Angle Notcher
29 Angle Notcher Maintenance
30 Optional - Press Brake
31 Press Brake Maintenance
32 Optional Pipe Notcher
33 Pipe Notcher Maintenance
34 Optional - Rod Shear/Multi-Shear
35 Rod Shear/Multi-Shear Maintenance
36 Optional - Hydraulic Accessory Package
37 Exploded View
38 Parts List
39 Troubleshooting

Company Profile

The Cleveland Steel Tool Company offers a full line of high quality, low maintenance hydraulic ironworking machines, associated tooling and accessories that are used in the steel fabrication industry. With proper operation, care, and maintenance, your Cleveland Steel Tool Ironworker will provide years of safe, trouble-free ironworking service. Please take time to study this manual carefully to fully understand Ironworker safety procedures, set-up, operation, maintenance, troubleshooting and warranty coverage prior to putting the machine into production. Any questions not answered within this manual can be directed to The Cleveland Steel Tool Company or visit www.clevelandsteeltool.com for more information.

Environmental Requirements

The work station environment for your Cleveland Steel Tool Ironworker must meet the following minimum requirements:

- Floor area: Assure that the machinery work area provides for a stable, adequately sized and load

Electronics
Electronic equipment must be recycled as required by local environmental law. Do not dispose of by adding to the municipal waste stream.

Metal
Metal components must be recycled as required by local environmental law. Do not dispose of by adding to the municipal waste stream.Notice Panel

WA

120 TON

Signal Word Panel • Machine Back

Signal Word Panel

Machine Left

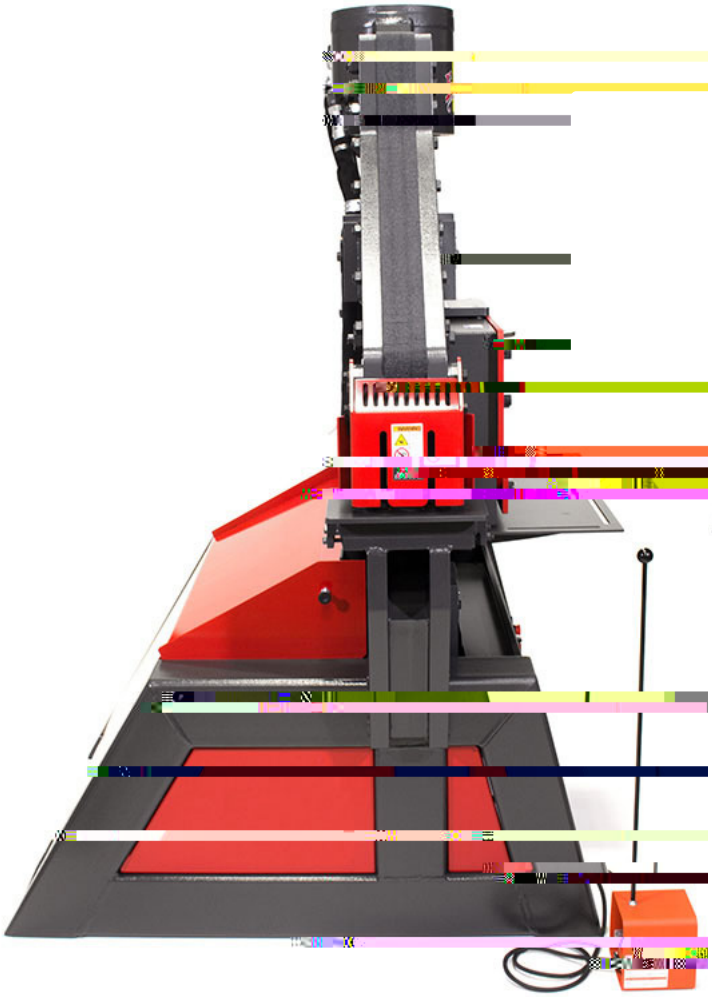

Machine Right

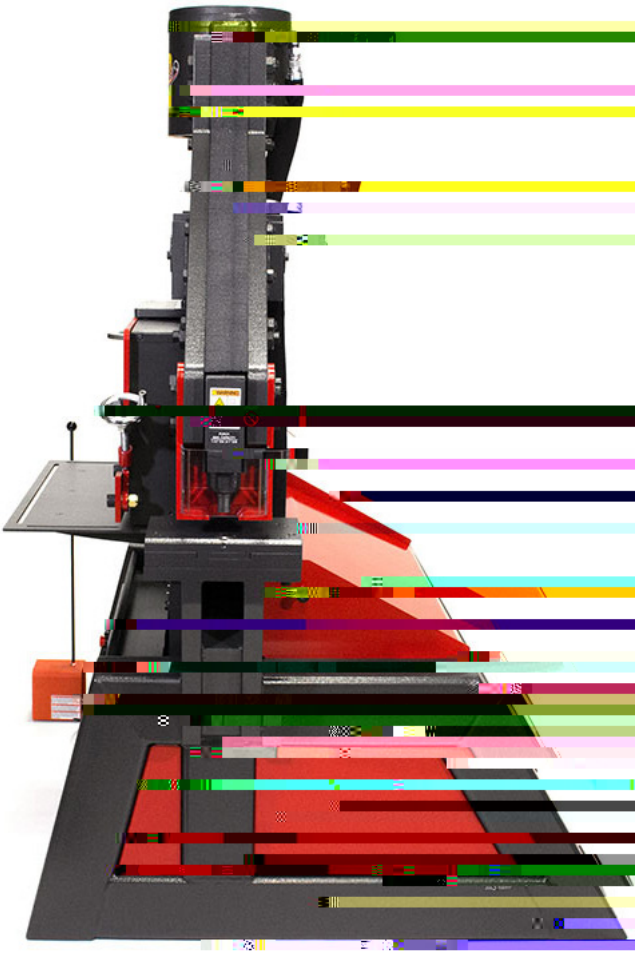

Your Cleveland Steel Tool Ironworker will benefit from reasonable care and periodic maintenance. Reasonable care includes daily visual observation, general maintenance daily, weekly, monthly and at hourly milestone intervals by operator/maintenance personnel. Perform inspections and maintenance of the electrical, hydraulic, and mechanical systems of the Ironworker and any optional Cleveland Steel Tool hydraulic accessory connected to the Ironworker as follows:

Daily/Shift Change Visual Observation

Electrical System

Visually inspect incoming power and exposed surface conduit or cabling on the Ironworker for signs of damage. Cut, abraded or crushed electrical cords may present an electrical hazard to the Operator and damage the machinery. Replace fuses as necessary with same type and rating. Fuses located behind control box. See Figure 1 below.

Hydraulic System

Visually inspect exposed or surface mounted hydraulic hoses and fittings for signs of damage. Cut, abraded or crushed hydraulic hoses or leaking fittings may present a hydraulic fluid hazard to the Operator and damage the machinery.

Plug hose ends when working with hydraulic fluids and clean up spills near the machinery in a timely manner to reduce the likelihood of spills, trips and falls.

Mechanical System

Visually inspect guards and material hold-downs protecting moving parts. Guards and material hold-downs must
los remain on the machine for safe operation. Clear any material w(.5d
obstructions at the work stations prior to visually inspecting moving parts of the machine. Cycle the machine. Machine

Operations Diagram

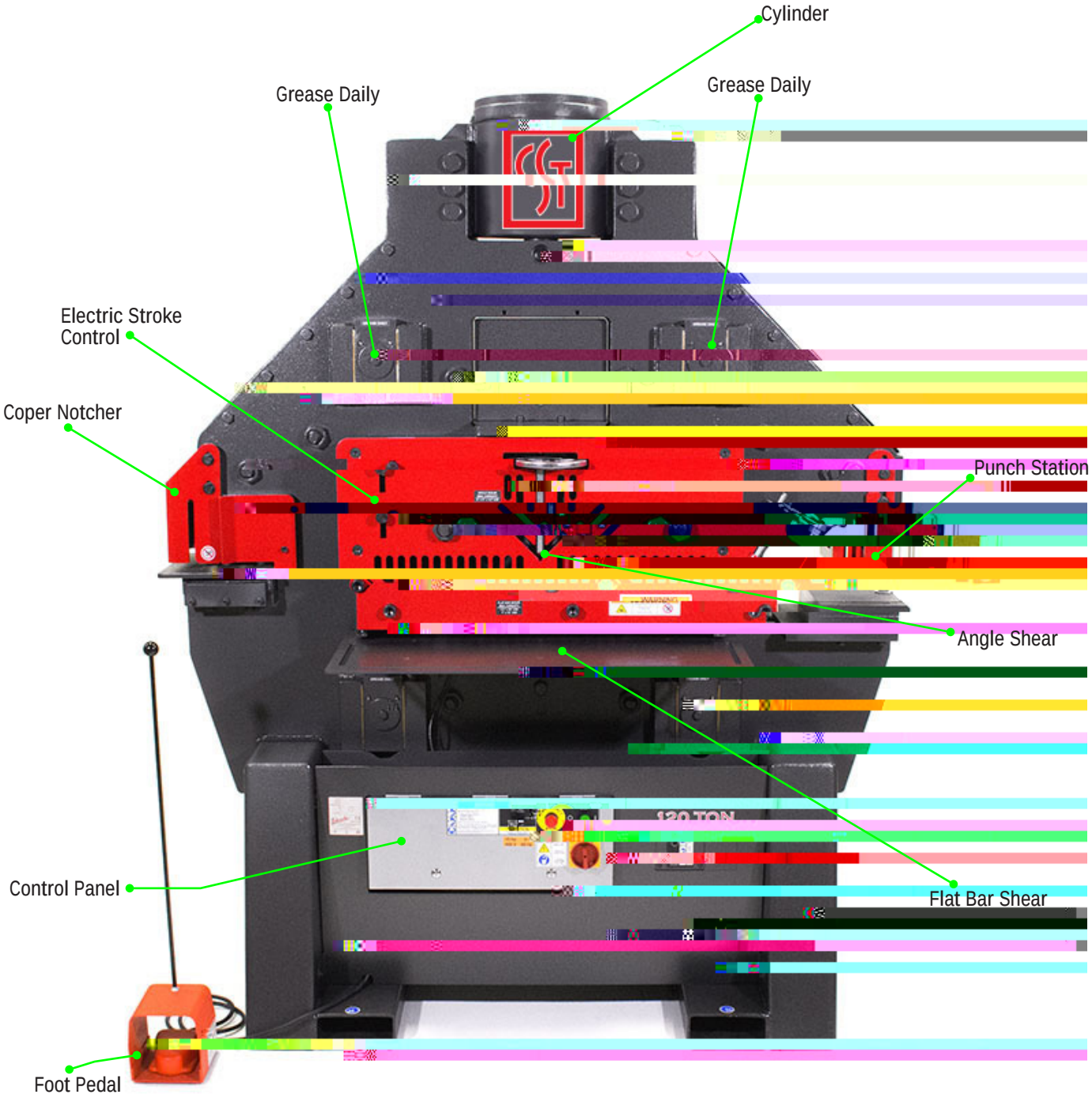

Visit our website to view our Ironworkers in action.
https://www.clevelandsteeltool.com/catalog-and-literature/videos

WA

Flat Bar Shear Station

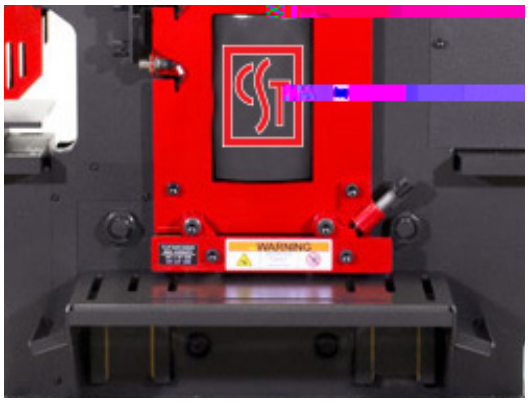

⚠WARNING

Your Ironworker includes a flat bar shear as a standard feature. The flat bar shear will provide a distortion and burr

Maintenance - Flat Bar Shear

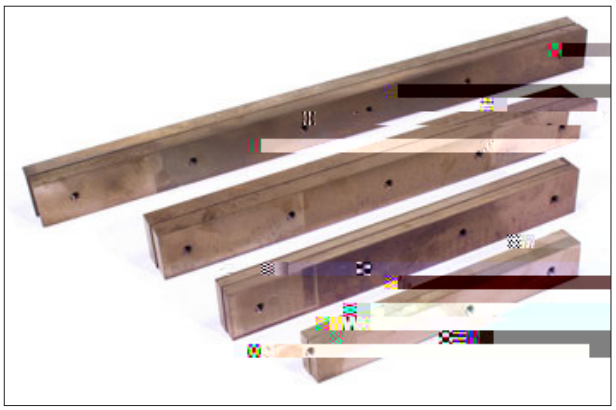

⚠CAUTION

Turn off power to machine by depressing the red stop/off button and lockout upstream power at the main electrical panel.

Clearances should not be altered. When all 4 cutting edges are worn, replace blades.

Remove and replace stationary blade:

1. Remove the material hold-down assembly from the Ironworker frame by removing the return spring and bolts that secure the assembly to the Ironworker frame.

2. Remove blade bolts located under the feed table. Remove the stationary blade.

3. With blade removed, clean blade pocket of any dirt or debris.

4. Your shear blades have multiple cutting surfaces that can be flipped and rotated prior to full replacement of the part. Rotate the stationary blade to new cutting surface and reinstall in blade pocket.

5. Tighten the stationary blade back into the blade pocket.

Remove and replace moving blade:

1. Remove the drop-off guard from the rear of the Ironworker frame.

2. Power on the machine and inch the moving center down to reveal blade bolts for the moving blade.

WARNING

Coper Notcher tooling will provide a distortion and burr free, three-sided shear cut to mild steel bar, plate, or angle stock as listed in the machine specifications as well as the capac-

⚠CAUTION

Turn off power to machine by depressing the red stop / off button and lockout upstream power at the main electrical panel.

Observe the following procedure when maintaining the Ironworker Coper Notcher station.

Remove and replace moving blade:

1. Remove or swing the Coper Notcher guard assembly up and away from the Coper Notcher table.

2.tcher guard assembly up

Optional Tooling - Auto Cut

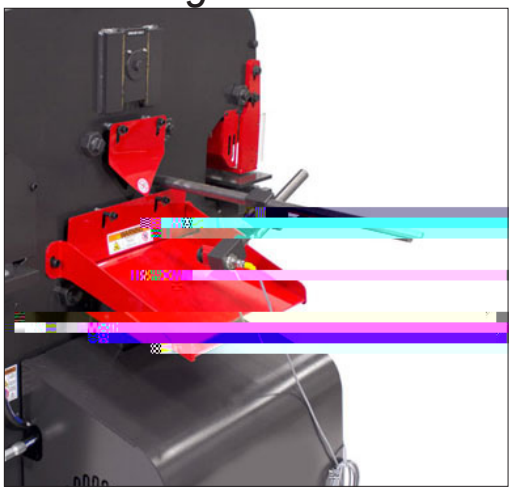

⚠WARNING

Auto-Cut tooling is a very useful accessory when production cutting long lengths of material to repeatable lengths. This tooling features a rugged solid-steel spring loaded switch housing, guarding snoot, 1" x 48" machined back-gauge rod and electrical controls. The accessory actuates the cutting operation when the plunger switch is activated.

Setup

Turn off power to machine by depressing the red stop / off button or lockout upstream power at the main electrical panel.

Installing the Auto-Cut Tool:

1. Locate the operations control box on the feed side of the machine.
2. Thread the back gauge rod into the threaded 1" hole in the back of the machine.
3. Install the cross block and actuator rod to the back gauge rod.
4. Adjust the actuator rod towards the back of the machine and align so that the material being sheared will activate the actuator plunger. Adjust the guarding snoot to be clear of the material being sheared.
5. Attach the Auto-Cut tool M12 male control cable to the 4-pin female Auto-Cut port.
6. Turn machine ON and turn the power selection at the operations control box to Auto-Cut. The power selection switches power and control from the Ironworker foot-pedal to the Auto-Cut tool.
7. With the shear stations clear of tools and debris, test the Auto-Cut operation by depressing the actuator plunger. The machine should perform a full cut cycle and return to the neutral position.

Safe Operation

Observe the following guidelines when operating the Auto-Cut Tool:

- Never exceed the capacities of the machine or tooling as described in the Ironworker specifications or listed at the tooling station.
- Check shear blade clearance at every tooling change or extended shear operation. Maintain proper operating clearance at bar shear and angle shear stations. Failure to maintain clearance will damage shear blades and support brackets.
- Fully engage the material hold-down with the material being cut.
- Do not stack material to cut in the shear station.
- Perform complete shear operations only – partial shear cuts may jam the drop off side of the frame and could result in breakage and operator injury.
- Do not shear angle or flat stock smaller than the hold-down will accommodate.

Auto-Cut Operation

1. Clear shear station of any tools or debris prior to powering the machine on.
2. Place iron into the material hold-down and position your cut mark adjacent to the moving shear blade.
3. Secure the iron in the material hold-down by engaging the handscrew or flat bar hold-down into the material.
4. Slide the auto-cut actuator to meet the leading edge of the material projecting through the shear station.
5. With the power off, activate the plunger by pushing the actuator into the material. Tighten the actuator rod to the back gauge rod.
6. Test cut by turning the machine on.
7. Release hold-down pressure slightly to allow material to be pushed through the shear station.
8. Push the material through the shear station to engage the actuator plunger.
9. The machine will cycle and shear the specified material.
10. Check the cut material dimension and adjust as necessary for production cutting.

Optional Accessory Light

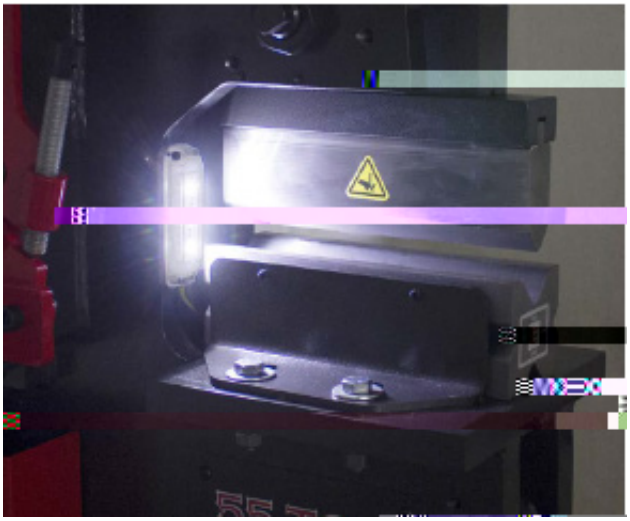

Accessory lighting is available as optional tooling. Designed with M12 connections, this super bright LED light plugs in to 2014 and newer Ironworkers and has a 100,000 hour rating. Super durable lexan lens and magnetic base allow you to attach the light on any Ironworker surface.

Accessory work lights contain magnets -
Magnet Safety Warning!

D [illegible] :C [illegible] S [illegible] T [illegible] W [illegible]

Neodymium magnets are very strong. Handling them with care is necessary to prevent personal injuries, property damages and magnet damages.

1. Neodymium magnets are brittle; they can be broken or can splinter in a collision. One should wear gloves and protective glasses when handling these magnets, because splinters could disengage and fly from the magnets.

2. Normal Neodymium magnets will lose their magnetic properties if heated above 175°F (80° C).

3. The strong magnetic fields of neodymium magnets can damage items such as television, computer monitors, credit cards, bank cards, computers, diskettes and other data carriers, video tapes, mechanical watches, hearing aids, loud speakers and VCRs. Pacemakers may be damaged or switch to "Test Mode" in the presence of a strong magnetic force, if a pacemaker is in use, keep a minimum of 3 feet distance.

4. Children should not be allowed to handle neodymium magnets as they can be dangerous. Small magnets pose a choking hazard and should never be swallowed or inserted into any part of the body.

5. Under no circumstances should you try to cut, saw or drill the Neodymium magnets! The resulting dust from the magnet is very flammable.

Punch Station

Your Ironworker is capable of punching materials as listed on the capacity labels positioned adjacent to the Punch station.

Setup

Your Cleveland Steel Tool Ironworker has been shipped with a punch and die installed within the punch station. Punches and dies are wearing parts and will need to be maintained or replaced over time. Refer page 24 for removal and replacement instructions. When changing the punch and die during typical operation please observe the following steps:

Turn off power to machine by depressing the red stop/ off button or lockout upstream power at the main electrical panel.

1. Swing Stripper Bar away by loosening 4 bolts (2 on either side of punch station) with a 3/4" wrench. After swinging Stripper Bar away, re-tighten one bolt to prevent it falling back on you.

2. Remove punch by loosening the punch nut assembly with factory supplied wrench.

3. Remove die by loosening the set screw at the side or front edge of the punch table and then lifting die from the die holder. If the die resists removal gently tap the die from the underside of the punch table to loosen the die for removal.

4. Install new die and tighten set screw. If loading a shaped die, align the whistle spot with the set screw and tighten.

5. Install new punch and tighten punch nut with wrench. If using a shaped punch, align the locating keystock of the punch with the corresponding slot within the punch stem assembly and tighten the punch nut with the wrench.

6. Check for punch and die alignment by powering up the machine and inching down the punch to meet the die with the foot pedal. Check to see that the punch is centered in the die.

7. In the event that the punch and die are not aligned, loosen the bolts under the table allowing the table to be moved to center the die. When aligned, tighten the table bolts to secure the table.

8. Loosen bolts and swing the stripper bar back in place. Adjust stripper bar for minimal clearance between the top of the material and the bottom of the stripper.

Safe Operation

Please observe the following guidelines when operating the Punch Station:

- Follow manufacturers punch and die clearance recommendations. Follow punch tonnage requirements in Figure 2, page 23.
- Never exceed the capacities of the machine or tooling as described in the Ironworker specifications or listed at the tooling station.
- The thickness of the material you are punching should not exceed the diameter of the punch being used.
- Check punch and die alignment after every tooling change or extended punch operation.
- Adjust the punch stripper supplied with your Cleveland Steel Tool Ironworker to allow for material positioning and material stripping.
- Do not stack material to punch in the punching station.
- Use one or two drops of oil at the punch to aid in stripping material from the punch as well as to extend the life of the punch tooling.
- Punch complete holes only – partial holes will side load the punch tooling and could result in punch breakage and operator injury.
- Use punching aids when working with small items at the punch station.

Punch Operation

Clear the punch station of any tools or debris prior to powering the machine on.

1. Place the material to be punched between the punch and die. Check to see that your material is spanning the stripper plate and that adequate material is available to safely position the material.

2. Clear your hands from the working area and depress the foot pedal to move the punch through the material and into the die.

3. When the punch is complete, release the foot pedal to automatically strip the material from the punch and return the punch to its neutral position.

Punch and Die Operating Clearances

Maintain the following clearance between punch and die.

Material Thickness	Total Clearance
16 gauge and lighter	.006"
15 gauge - 13 gauge	.010"
3/32" - 5/32"	1/64"
3/16" - 15/32"	1/32"
1/2" - 23/32"	1/16"
3/4"and heavier	3/32"
1" and over	1/8"

Punching Capacities

You can determine the tonnage required to punch A36 mild steel (yield strength 36,300 psi, 65,000 psi tensile) by referencing Figure 2 or applying the following formulas for round or shaped holes. For materials other than mild steel please refer to the multiplier table.

Round Holes

Punch Dia. x Material Thickness x 80 = Tons of pressure required

Example: How many tons of force do I need to punch a 3/8" hole in 1/4" mild steel?

.375 x .25 x 80 = 7.5 tons

Shaped Holes

1/3 Punch Perimeter x Material thickness x 80 = Tons of pressure required

Example: How much force do I need to punch a 3/8" x 1" rectangular hole in 1/4" mild steel?

(.33 x 2.75) x .25 x 80 = 18.1 tons

Material Multiplier

When punching materials other than mild steel first calculate tonnage as shown above then apply the multiplier for the listed material.

Aluminum (2024-0)	0.36
Brass (1/4 hard)	0.70
Copper (1/2 hard)	0.52
Steel (50% carbon)	1.60
Steel (cold rolled) (1018)	1.24
Stainless Steel (303)	1.50

Figure 2 - Punch Tonnage Requirements

	1/8	3/16	1/4	5/16	3/8	7/16	1/2	9/16	5/8	11/16	3/4	13/16	7/8	15/16	1"
26 ga. (.0179)	0.18	0.27	0.36	0.45	0.54	0.63	0.72	0.81	0.90	0.99	1.07	1.16	1.25	1.34	1.43
24 ga. (.0239)	0.24	0.36	0.48	0.60	0.72	0.84	0.96	1.08	1.20	1.31	1.43	1.50	1.67	1.89	1.91
22 ga. (.0299)	0.30	0.45	0.60	0.75	0.90	1.05	1.20	1.35	1.50	1.65	1.80	1.95	2.10	2.24	2.39
20 ga. (.0359)	0.36	0.54	0.72	0.90	1.08	1.26	1.44	1.62	1.80	1.98	2.15	2.33	2.51	2.69	2.87
18 ga. (.0478)	0.48	0.72	0.96	1.20	1.43	1.67	1.91	2.15	2.39	2.63	2.87	3.11	3.34	3.58	3.82
16 ga. (.0598)	0.60	0.90	1.20	1.50	1.79	2.09	2.39	2.69	2.99	3.29	3.59	3.89	4.19	4.49	4.78
14 ga. (.0747)	0.75	1.12	1.49	1.87	2.24	2.61	2.99	3.36	3.73	4.11	4.48	4.86	5.23	5.60	5.97
12 ga. (.1046)	1.05	1.57	2.09	2.62	3.14	3.66	4.18	4.71	5.23	5.75	6.28	6.80	7.32	7.85	8.57
10 ga. (.1345)		2.02	2.69	3.36	4.04	4.71	5.38	6.05	6.73	7.40	8.07	8.74	9.42	10.09	10.76
3/16 (.187)		2.81	3.74	4.68	5.61	6.50	7.48	8.42	9.35	10.29	11.22	12.16	13.09	14.03	14.96
1/4 (.250)			5.00	6.25	7.50	8.75	10.00	11.25	12.50	13.75	15.00	16.25	17.50	18.75	20.00
3/8 (.375)					11.25	13.13	15.00	16.88	18.75	20.63	22.50	24.38	26.25	28.13	30.00
1/2 (.500)							20.00	22.50	25.00	27.50	30.00	32.50	35.00	37.50	40.00
5/8 (.625)									31.25	34.38	37.50	40.63	43.75	46.88	50.00
3/4 (.750)											45.00	48.75	52.50	56.25	60.00
7/8 (.875)													61.25	65.63	70.00
1" (1.000)															80.00

Optional Tooling - Oversize 241 Punch and 28XX Die Assembly

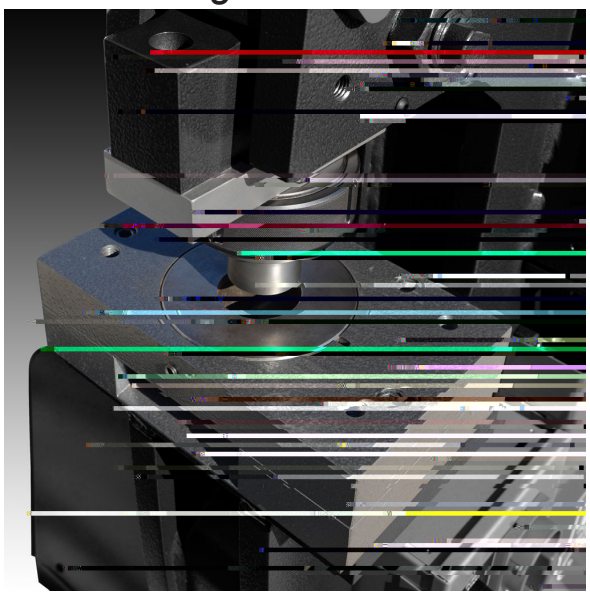

Cleveland Steel Tool Ironworkers allow for Oversize 241 Punch and 28XX Die tooling to be installed in either the punch station or the open station. 241/28XX tooling has a capacity of a 4" round hole through 1/8" thick mild steel.

Setup

241 Punch tooling fits within the open or standard punch station of the machine. 241/28XX tooling includes an oversize 241 punch stripper, 241 punch holder assembly, 28XX die table and wrench. Punch and dies are wearing parts and will need to be maintained or replaced over time. When installing 241 punch and 28XX die tooling please observe the following steps:

Turn off power to machine by depressing the red stop / off button or lockout upstream power at the main electrical panel.

Install the punch holder:

1. Clear any tooling or debris from the tooling installation site.
2. Secure the 241 punch holder to the operating center by first removing the stud from the holder. Place the holder to the operating center with the tapped hole positioned to the outside of the center. Install holder with two 1/2" SHCS bolts and tighten. Install stud to holder with four 3/8" SHCS bolts and tighten.

Install the die table:

Place the 28XX die table and slug chute on the support table base and loosely install four 1/2" bolts (provided) through the underside of the support table into the 28XX die table.

1. Install new 28XX die and tighten set screw. If loading a shaped die, align the whistle spot with the set screw and tighten.
2. Install new 241 punch and tighten with spanner wrench. If using a shaped punch, align the locating keystock (not provided) of the punch with the corresponding slot within the punch stem assembly and tighten the punch nut with the wrench.
3. Check for punch and die alignment by powering up the machine and slowly inching down the punch to meet the die with the foot pedal. Check to see that the punch is centered in the die. Turn off power to machine.
4. Check for punch and die alignement by powering up the machine and slowly inching down the punch to meet the die with the foot pedal. Check to see that the punch is centered in the die. Turn off the power to the machine.
5. In the event that the punch and die are not aligned, simply loosen the bolts under the table allowing the table to be moved to center the die. When aligned, tighten the table bolts to secure the table.
6. Install and secure the 241 stripper bar to the ironworker frame allowing for minimal clearance between the top of the material to be punched and the bottom of the stripper.

Safe Operation

Observe the following guidelines when operating the 241 Punch Station.

- Follow manufacturers punch and die clearance recommendations as shown in Figure 2, page 23.
- Never exceed the capacities of the machine or tooling as described in the machine specifications or listed at the tooling station.
- The thickness of the material you are punching should not exceed the diameter of the punch being used.
- Check punch and die alignment after every tooling change or extended punch operation.
- Adjust the punch stripper supplied with your 241 tooling to allow for material positioning and material stripping.
- Do not stack material to punch in the punching station.
- Use one or two drops of oil at the punch to aid in stripping material from the punch as well as to extend the life of the punch tooling.
- Punch complete holes only – partial holes will side load the punch tooling and could result in punch breakage and operator injury.
- Use punching aids when working with small items at the punch station.

241 Punch Operation

1. Clear the punch station of any tools or debris prior to powering the machine on.
2. Turn the Ironworker on and place the material to be punched between the punch and die. Adjust the punch stripper for minimum clearance between stripper plate

PUNCHES

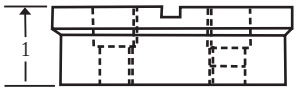

DIES

Maintenance - Angle Notcher

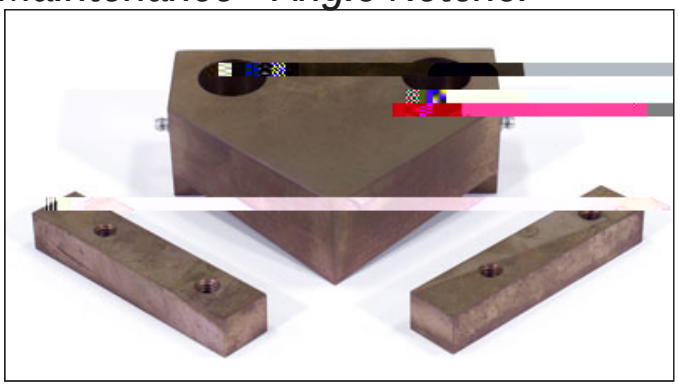

⚠CAUTION

Turn off power to machine by depressing the red stop/off button and lockout upstream power at the main electrical panel.

Observe the following procedure when maintaining the Ironworker Angle Notcher station.

Remove and replace moving blade:

1. Remove the Angle Notcher guard assembly from the Angle Notcher table.
2. Remove the two 1/2" socket head cap screws that secure the Angle Notcher push block to the moving center.
3. Clean the keyway in the moving center of any dirt or debris.
4. With the push block removed, lift the moving top blade from the guide pin assembly. Clean and lubricate the guide pins and reinstall new moving top blade.

Remove and replace stationary blades:

1 The Angle Notcher base table includes two blades secured within the table housing. Remove the four 1/2" socket head cap screws that secure the blades into the blade supports of the base table housing.

2. Clean the blade pockets of any dirt or debris.
3. The bottom shear blades have multiple cutting surfaces. Either rotate/flip the existing blade set to the new cutting surfaces or install new cutting blades into the blade pockets. Re-install the four 1/2" socket head cap screws and tighten. The blades should be parallel to each other at the top surface of the working table.
4. Reinstall the push block to the moving center with the two 1/2" socket head cap screws provided.
5. Check for top and bottom blade alignment by powering up the machine and slowly inching down the top blade to meet the bottom blades with the foot pedal. Power the machine off.
6. Using feeler gauge, confirm the clearance between the perimeter of the top and bottom blades to allow for .010" clearance on two sides.
7. Periodically lubricate the Angle Notcher assembly with the grease fittings supplied as indicated on the tooling.

The 120 Ton Cleveland Steel Tool Ironworker can accommodate an 8" or 10" Press Brake. Press Brake tooling will allow for the graduated bending of 1/16", 3/16", 1/8" and 1/4" flat stock up to 90 degrees. This tooling is most effective when operated with the factory installed Electric Stroke Control feature.

Setup

Press Brake tooling can be accommodated in either the open station or punch station of the machine. Press Brake tooling includes one mounting bracket to secure the “punch” to the center of the machine, one “punch”, one “4-way die”, and two bottom brackets that secure the “die” to the base table. The moving “center” of the ironworker, pushes the top punch into the shaped die to bend the specified material. If ordered as a factory installed option, your Press Brake assembly is setup for immediate operation. If ordered as an option, the open station or punch station must be cleared of any existing tooling, material or debris prior to tooling installation. To setup your Press Brake, please observe the following steps:

Install the punch holder:

1. Remove all tooling and guarding from the open station or punch station.
2. Secure the punch holder to the moving “center” with bolts provided. The 1/2" tapped hole is positioned to the outside of the machine.
3. Position punch in the holder so that the milled relief in the keyway slips over the holder bolt. Tighten set screws in the holder to secure the punch.
4. Depress the foot pedal to activate the Press Brake station. When the Press Brake operation is complete, release the foot pedal to return the punch to the neutral position.

Install the 4-Way Die:

1. Place the die assembly on the Ironworker support table.
2. Loosely secure the two support brackets to the support table from the underside of the base with four 1/2" bolts, nuts and washers (provided).
3. Check for punch and die alignment by powering on the machine and slowly inching down the punch to meet the bottom die with the foot pedal. Power the machine off.
4. In the event that the punch and die are not aligned, simply loosen the bolts under the table allowing the die block to be moved to center the punch. When aligned, tighten the table bolts to secure the table.
5. Select 1/16", 3/16", 1/8" or 1/4" test material for bending. Rotate your four-way die to your selected material thickness. Power the machine on and jog the center down until the punch pushes the sample material into the die. If the punch stops before the material has been formed to a 90 degree angle, a small steel shim must be placed between the die and support table.
6. Re-install all guarding to the machine prior to machine use.

Safe Operation

Observe the following guidelines when operating the Press Brake Station.

- Never exceed the capacities of the machine or tooling as described in the Ironworker specifications or listed at the tooling station.
- Keep the Press Brake tooling clean.
- Check Press Brake clearance and alignment at every tooling change, maintenance cycle or extended Press Brake operation. Failure to maintain proper clearance may damage punch, die and support brackets or adjacent tooling.
- Press material towards the center of the Press Brake length.
- Do not stack material in the Press Brake station.
- When not in use, remove the Press Brake die from the holder.

Press Brake Operation

1. Clear the station of any tools or debris prior to powering the machine on.
2. Turn the Ironworker on and place the material to be “broken” on top of the bottom die.
3. Center your material within the length of the bottom die.

Turn off power to machine by depressing the red stop/off button and lockout upstream power at the main electrical panel.

Observe the following procedures when maintaining or replacing components of the Ironworker Press Brake station.

Remove and replace moving Punch:

1. While supporting the punch, carefully remove the allen screws that secure the punch to the punch holder. Remove the punch.

2. If the punch holder requires replacement, remove the two 1/2" socket head cap screws from the punch holder assembly. Remove punch holder.

3. Clean the keyway in the moving center of any dirt or debris.

4. Install the new punch holder with the two 1/2" socket head cap screws. The 1/2" tapped hole is positioned to the outside of the machine. Tighten the assembly into the moving center.

5. Position punch in the holder so that the milled relief in the keyway slips over the holder bolt. Tighten set screws in the holder to secure the punch.

6. Re-install all guarding to the machine prior to machine

WARNING

4. Re-install the push block to the moving center with the two 1/2” socket head cap screws provided.

Remove and replace stationary blade:

1 The Pipe Notcher base table includes one blade secured within the table housing. Remove the two 1/2" socket head cap screws and washers that secure the blade into the base table housing.

2. Clean the blade pocket of any dirt or debris.

3. Install new cutting blade into the blade pocket. Re-install the two 1/2" socket head cap screws and washers provided and tighten.

4. Check for top and bottom blade alignment by powering up the machine and slowly jog the center down. The pipe dies will close or bypass each other. The push block should not come in contact with the die housing.

5. Periodically lubricate the Pipe Notcher assembly as indicated on the tooling.

Optional Tooling - Rod Shear/Multi-Shear

Install the assembly:

1. Remove all tooling and guarding from the appropriate punch station or open station.

2. Place the Rod Shear or Multi-Shear assembly on the Ironworker support table with the push block in line with the moving center.

3. Loosely secure the table from the underside of the base with 551/2" bolts and washers (provided).

4. Check for push block and moving center alignment by powering on the machine and slowly inching down the center to meet the push block with the foot pedal. Power

⚠WARNING

CA

Turn off power to machine by depressing the red stop/off button and lockout upstream power at the main electrical panel.

Clearances should not be altered. When all cutting edges are worn, replace blades.

Observe the following procedures when maintaining or replacing components of the Rod or Multi-Shear assemblies:

Remove and replace moving blade:

1. Remove Rod Shear or Multi-Shear assembly from tooling station by removing the four 1/2" bolts, nuts and washers.

2. Remove the two 1/2" allen head screws that secure the push block to the moving blade. Remove damaged blade from base housing. Reserve the push block and return springs for installation of new blade.

3. Clean the push block and return springs of any dirt or debris.

4. Install new moving top blade to push block with allen head screws provided. Re-install return springs. and return moving blade to base housing.

Remove and replace stationary blade:

1 The Rod Shear or Multi-Shear assembly includes one or two blades secured within the base housing. Remove the six 1/2" socket head cap screws and spacers that secure the guard and blade into the base housing.

2. Clean the blade pocket of any dirt or debris.

120 Ton Exploded View

Troubleshooting

⚠WARNING

Your Cleveland Steel Tool Ironworker is designed for years of trouble-free use. In the event of operational problems, refer to the following troubleshooting strategies prior to contacting Cleveland Steel Tool. Turn off power to machine by depressing the red stop / off button or lockout upstream power at the main electrical panel before any trouble shooting activity.

Problem	Solution
Machine runs but will not cycle	Check rotation of motor Check correct amp/voltage to machine Check drive key is in place Check foot pedal cable obstruction Check power supply for green light Check electric foot pedal for obstruction Check proximity switches
Machine cycles down but will not return to neutral position	Check rotation of motor Check return spring at valve Check foot pedal linkage
Machine turns off after short time in use	Check correct amp/voltage to machine
Electric stroke option malfunction	Check correct amp/voltage to machine Check fuse at starter box Check fuse at transformer box Check for loose microswitch connections Check for damaged microswitch
Distortion of small angle shear cut	Check radius orientation of blade
Brass shavings below gib-pins and slides	Brass shavings are common and expected during the break-in period and after blade maintenance
Hydraulics feel hot after operation	Hydraulic system operates within the 160 – 190 degree Farenheit range
Shear blades or punch and die do not close completely	Check for notch tooling obstruction Check for Press Brake tooling obstruction
Punch and die misalignment	Check that punch is tight in holder Check that punch stud is secure in block Check for table alignment
Machine will not complete punch or shear operation	Check tonnage of machine rating against steel hardness and thickness Check for work station obstruction Check foot pedal linkage Check hydraulic fluid level Check slides for wear or obstruction Check electric stroke control option Check die support plate
Hydraulic oil overflow/foaming at breather cap	Check hydraulic fluid level Check for loose hose coupling